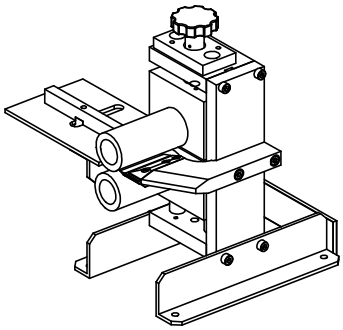

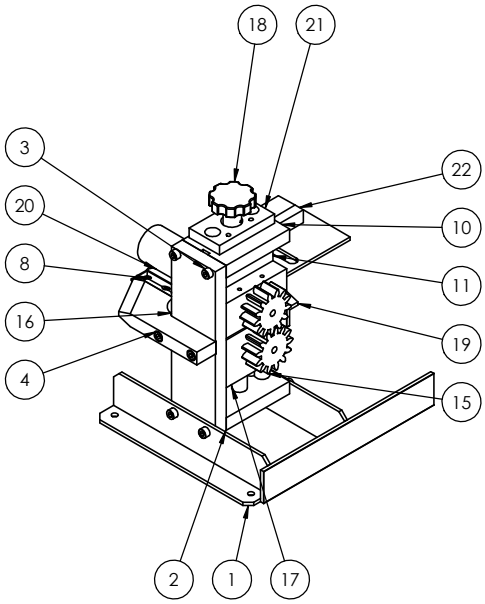

PRO	PART NUMBER	DES	Q
1	VOETPLAAT ASSEMBLY Correct		1
2	CHIORINO BEHUIZING Correct		1
3	ISO 4762 M8 x 12 - 12N		6
4	ISO 4762 M8 x 20 - 20N		2
5	ISO 4762 M4 x 20 - 20N		3
6	ISO 4762 M4 x 6 - 6N		1
7	Hoofdschakelaar behuizing ASSMBLY zonder schakelaar		1
8	SNIJBAAN Assembly Correct		1
9	EINDBAAN		1
10	CHIORINO PLAAT BOVEN		1
11	BLOCK # REVISION LONG SIDE		1
12	pillar without thread		1
13	pillar		1
14	ROLLER WITH GEAR		1
15	ISO - Spur gear 4.5M 13T 20PA 26FW --- S13B75H110L9.0N	ORDER	2
16	KNURLED		1
17	BLOCK # REVISION SHORT SIDE		1
18	Adjustable knob Camiel Theeuwes		1
19	MAATBAAN STEUN		1
20	ROLLER WITHOUT GEAR		1
21	KBOB BLOCK GELUTK		1
22	Maatblok		1
23	Maatblok Onderdeel		1

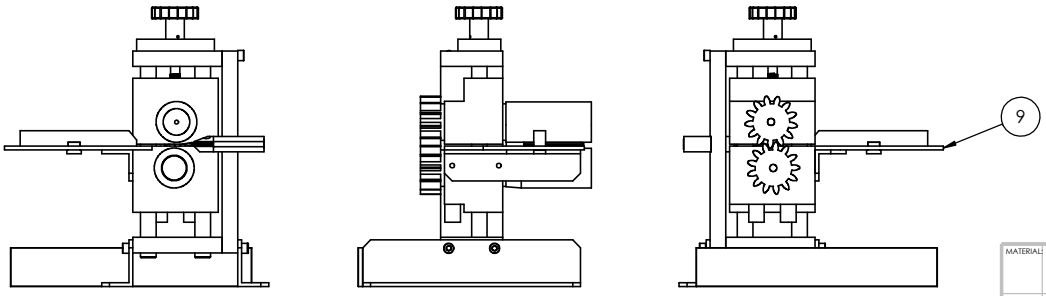

Theeuwes Solutions

MATERIAL: Aluminium

DWG NO. Drawings assembly CHIORINO

A3

SCALE:1:5

SHEET 1 OF 6

SOLIDWORKS Educational Product. For Instructional Use Only.

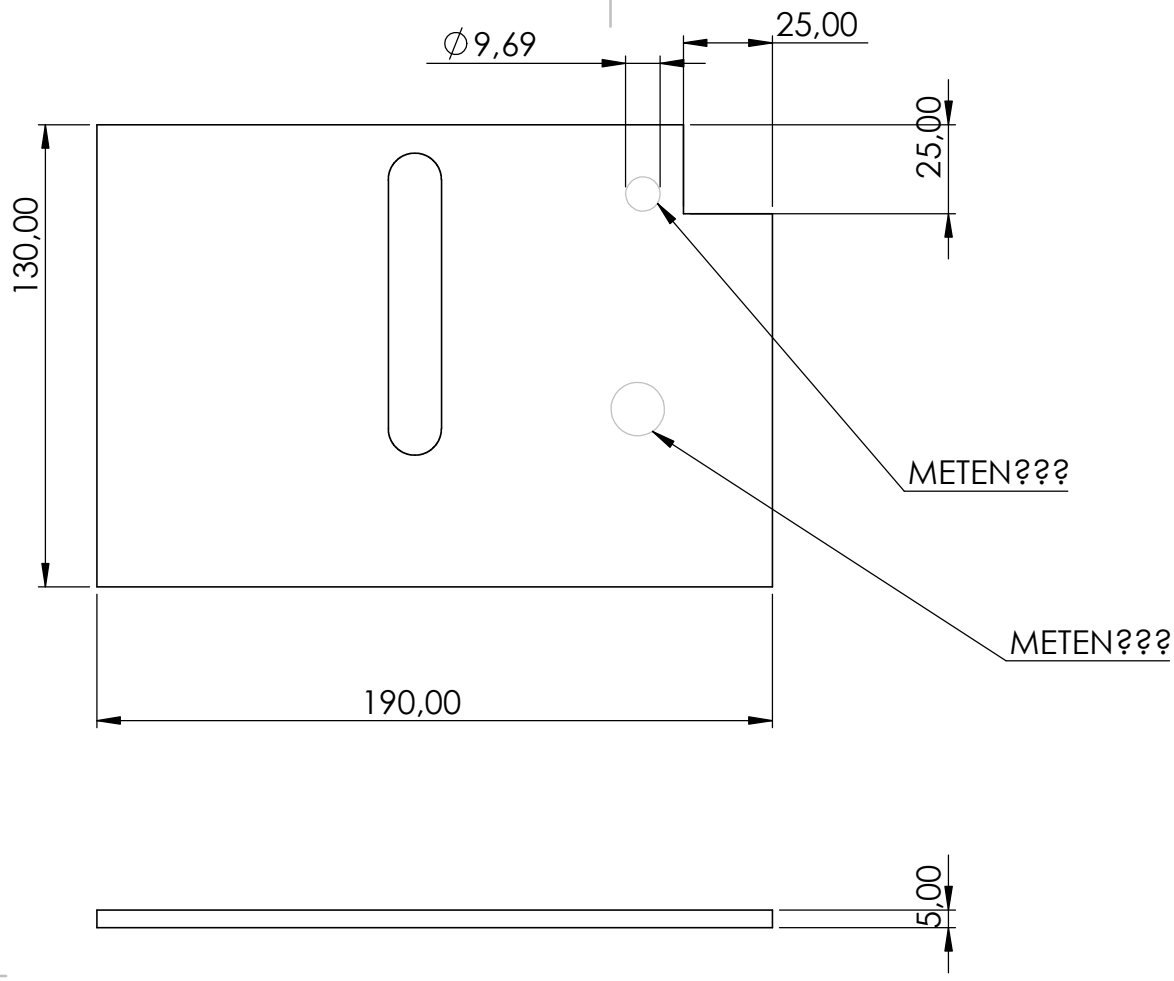

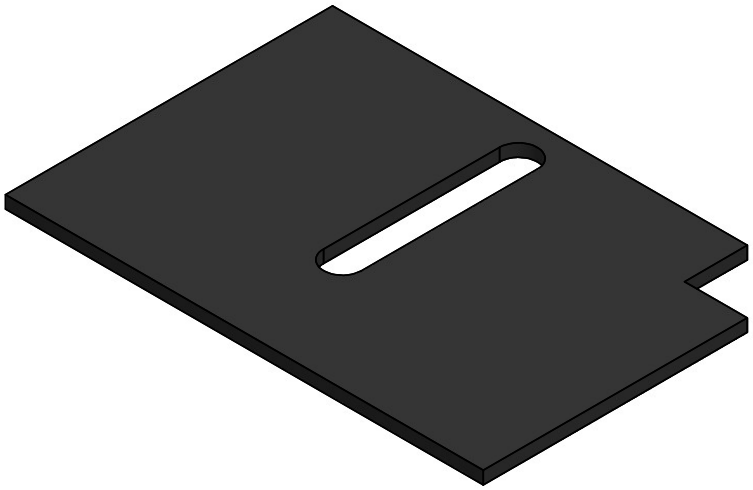

THEEUWES SOLUTIONS	
DWG NO. 9	EINDBAAN
TS-003-ZAG	A4

MILLIMETERS
SURFACE FINISH:
TOLERANCES:±0.5
NORM: EN 10025-2

FINISH: Poedercoaten RAL 9005 mat
MATERIAL: S235 JR

Camiel Theeuwes

WEIGHT: | SCALE:Veriable | SHEET 2 OF 6 | REVISION A

SOLIDWORKS Educational Product. For Instructional Use Only.

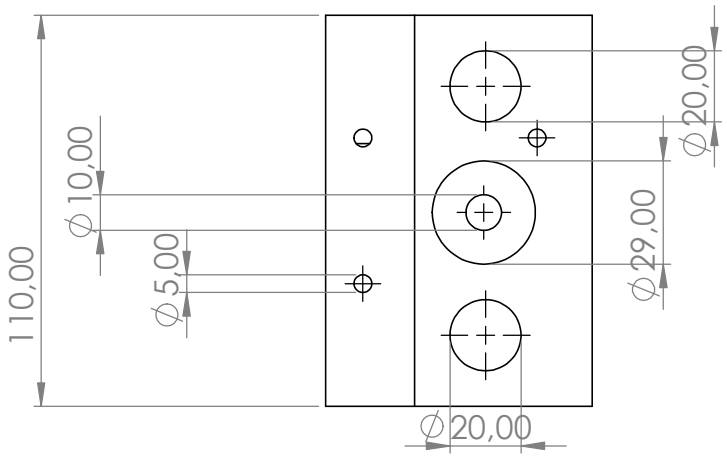

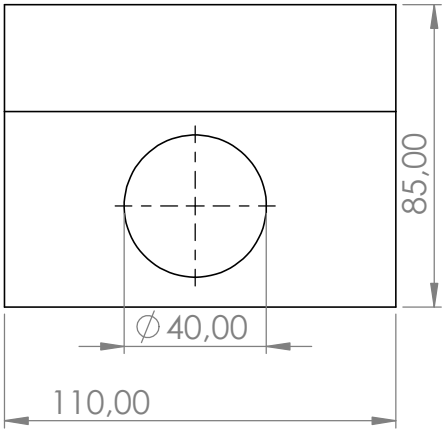

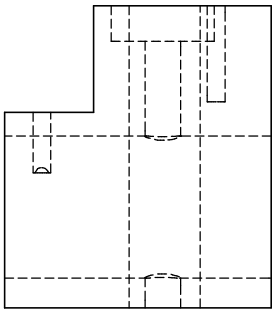

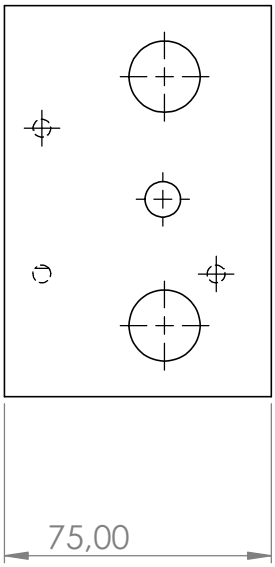

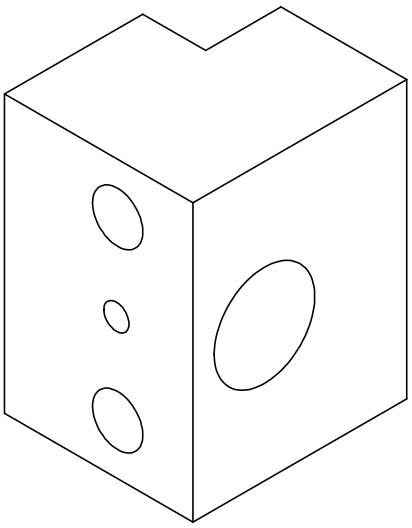

TITLE:

DO NOT SCALE DRAWING

THEEUWES SOLUTIONS

ZAAGPLAN BALK 600

FINISH: Poedercoaten RAL 9005 mat

DWG NO. TS-003-ZAG

A4

MILLIMETERS
SURFACE FINISH:
TOLERANCES:±0.5
NORM: EN 10025-2

MATERIAL: S235 JR

Camiel Theeuwes

WEIGHT:

SCALE:Veriable

SHEET 3 OF 6

REVISION A

SOLIDWORKS Educational Product. For Instructional Use Only.

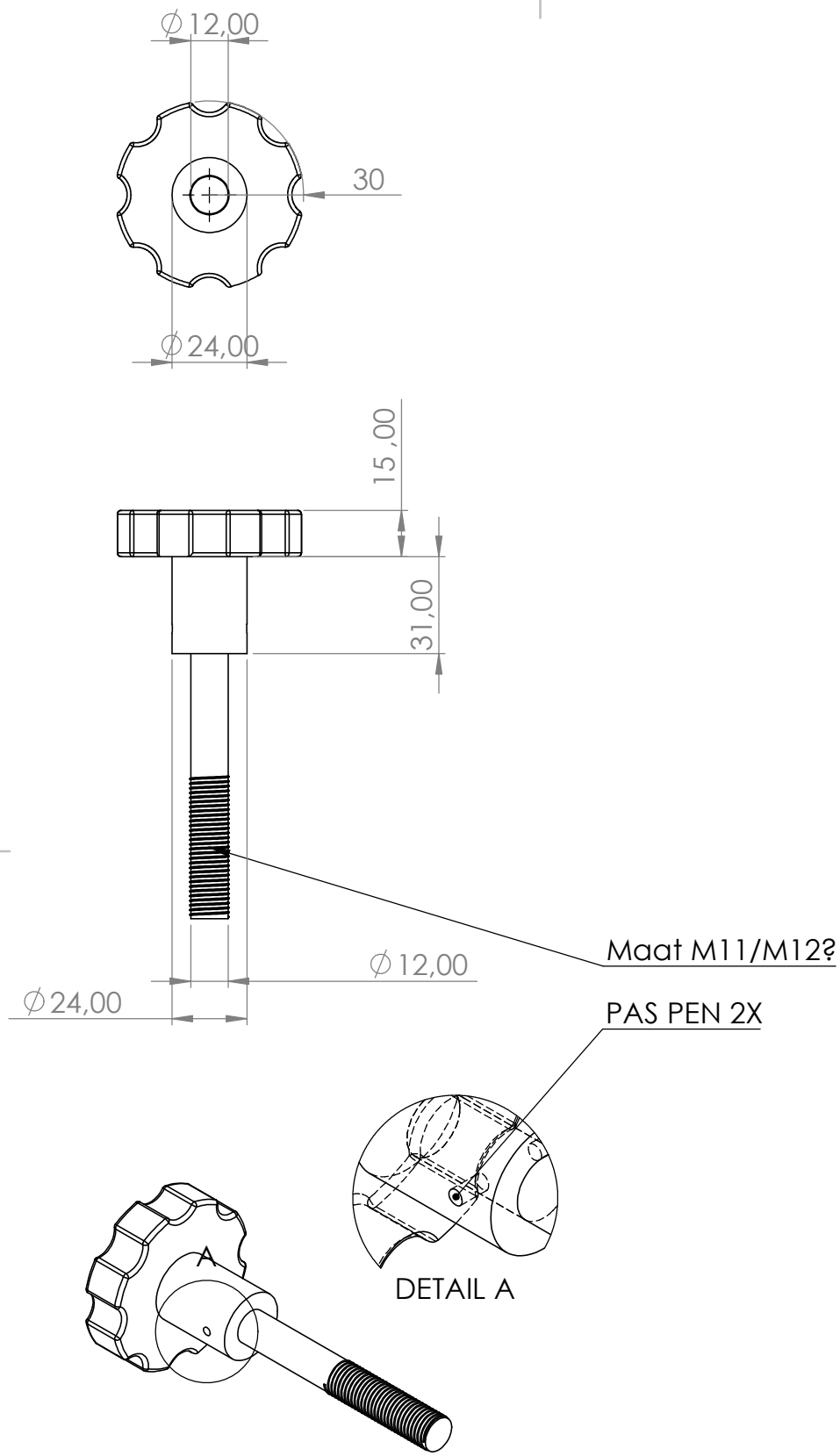

THEEUWES SOLUTIONS

DWG NO. 18 Draaiknop

FINISH: Poedercoaten RAL 9005 mat

MILLIMETERS
SURFACE FINISH:
TOLERANCES:±0.5
NORM: EN 10025-2

MATERIAL: S235 JR

TS-003-ZAG

A4

Camiel Theeuwes

WEIGHT:

SCALE:Veriable

SHEET 4 OF 6

REVISION A

SOLIDWORKS Educational Product. For Instructional Use Only.

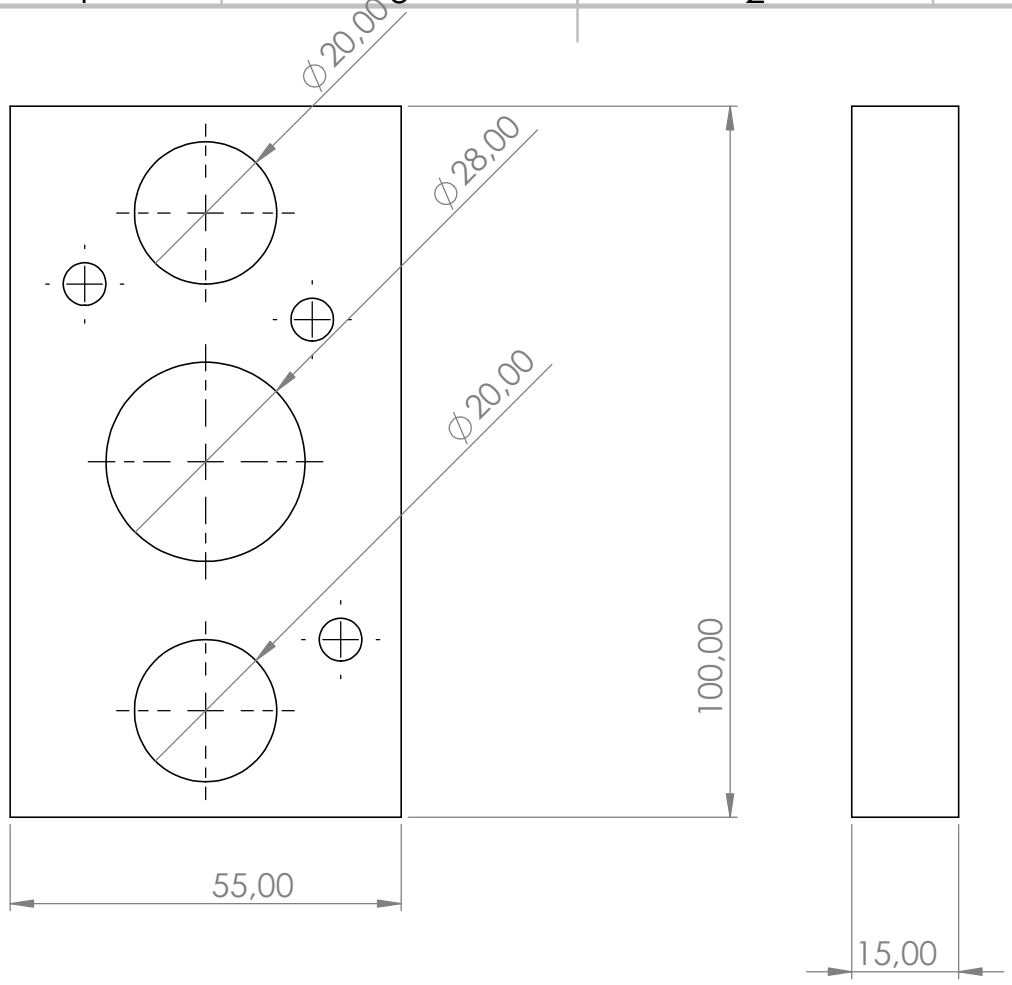

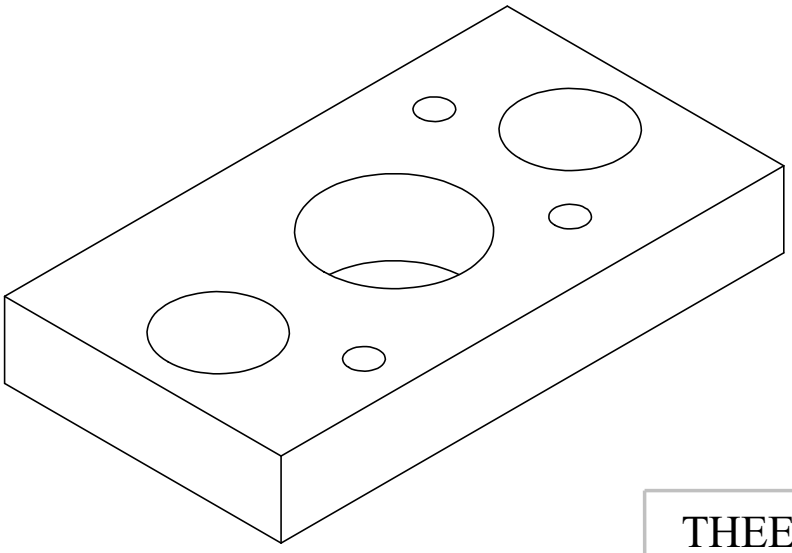

THEEUWES SOLUTIONS

DWG NO. 21 Draaiknop houder

FINISH: Poedercoaten RAL 9005 mat

MILLIMETERS
SURFACE FINISH:
TOLERANCES:±0.5
NORM: EN 10025-2

MATERIAL: S235 JR

TS-003-ZAG

A4

Camiel Theeuwes

WEIGHT:

SCALE:Veriable

SHEET 5 OF 6

REVISION A

SOLIDWORKS Educational Product. For Instructional Use Only.

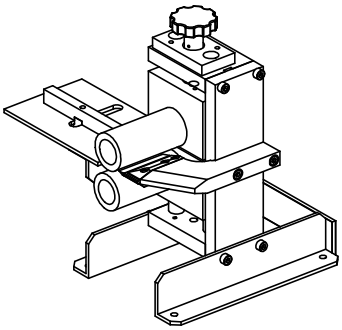

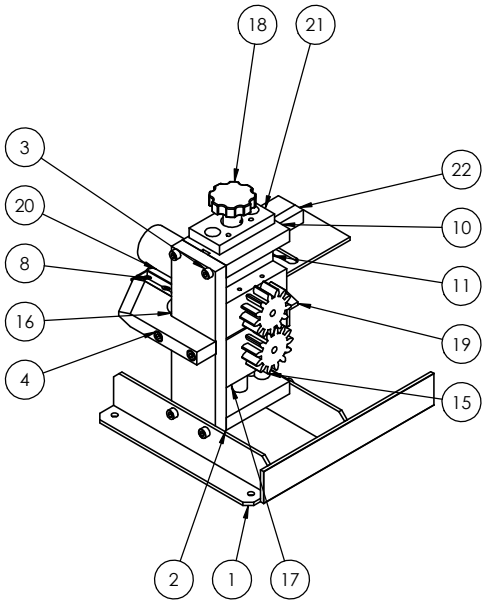

PRO	PART NUMBER	DES	Q
1	VOETPLAAT ASSEMBLY Correct		1
2	CHIORINO BEHUIZING Correct		1
3	ISO 4762 M8 x 12 - 12N		6
4	ISO 4762 M8 x 20 - 20N		2
5	ISO 4762 M4 x 20 - 20N		3
6	ISO 4762 M4 x 6 - 6N		1
7	Hoofdschakelaar behuizing ASSMBLY zonder schakelaar		1
8	SNIJBAAN Assembly Correct		1
9	EINDBAAN		1
10	CHIORINO PLAAT BOVEN		1
11	BLOCK # REVISION LONG SIDE		1
12	pillar without thread		1
13	pillar		1
14	ROLLER WITH GEAR		1
15	ISO - Spur gear 4.5M 13T 20PA 26FW --- S13B75H110L9.0N	ORDER	2
16	KNURLED		1
17	BLOCK # REVISION SHORT SIDE		1
18	Adjustable knob Camiel Theeuwes		1
19	MAATBAAN STEUN		1
20	ROLLER WITHOUT GEAR		1
21	KBOB BLOCK GELUTK		1
22	Maatblok		1
23	Maatblok Onderdeel		1

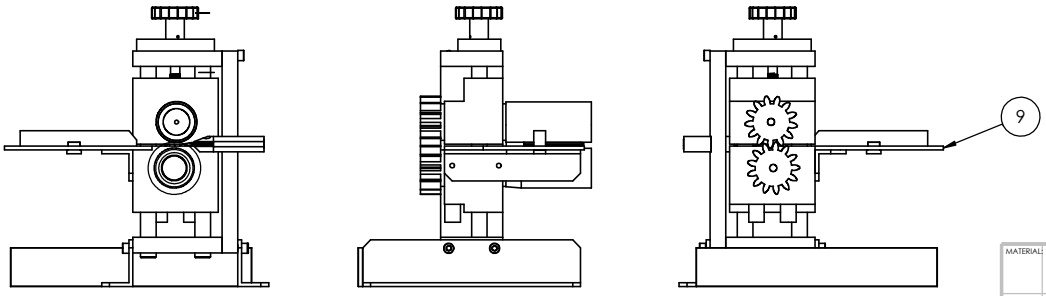

Theeuwes Solutions

MATERIAL: Aluminium

DWG NO. Drawings assembly CHIORINO

A3

SCALE:1:5

SHEET 6 OF 6

SOLIDWORKS Educational Product. For Instructional Use Only.